Universal Controller UC100
Short Instruction Manual

1. Getting started
   - Connect the UC100 to the serial interface of a PC (TXD-Pin2, RXD-Pin3, GND-Pin5 of the 9-pin Sub-D Conn.)
   - Run a Terminal program (COM-setting 1200 Baud, 8 data bits, 1 stop bit, no parity, echo off)
   - Connect supply voltage to the UC100 (3,3..5V DC between +VS and GND on the 10-pin connector JP1)
   - Press the on board push button once (or connect pin INT to GND briefly)
   - Menu appears on the screen ("RAM Mode….")
   - UC100 is now in RAM program mode: Enter instructions line by line. „run" as a last line will start the program. Pushing the on board button will stop the program and switch into program mode
     An error message will appear with memory overflow or wrong syntax of instructions
   - Short programs can easily be tested that way
2. Typing instructions line by line
   - Press the on board push button once (or connect pin INT to GND briefly)
   - Enter instruction "burn" (Menu "BURN Mode…" appears on the screen)
   - Starting from now every instruction line will be stored into the non volatile memory (only correct syntax accepted)
   - Terminate by typing „end" as a last line (total number of lines will be shown afterwards)
   - Program will start either by typing „run" or after every time switching the UC100 OFF and ON again
3. Uploading the „txt" file
   - Write the instructions line by line using any Text Editor
   - Depending on the desired mode use „ram&" or „burn&" as first line. In BURN Mode terminate by using instruction „end" as a last line
   - Use your Terminal software to send the „txt"-file to the UC100 (total number of lines will be shown afterwards)
   - Program will start either by typing „run" or after every time switching the UC100 OFF and ON again
4. Reading the non volatile memory
   - Press the on board push button once (or connect pin INT to GND briefly)
   - Enter instruction "burn" (Menu "BURN Mode…" appears on the screen)
   - Enter instruction „list" (Content of the non volatile memory will appear on the screen)

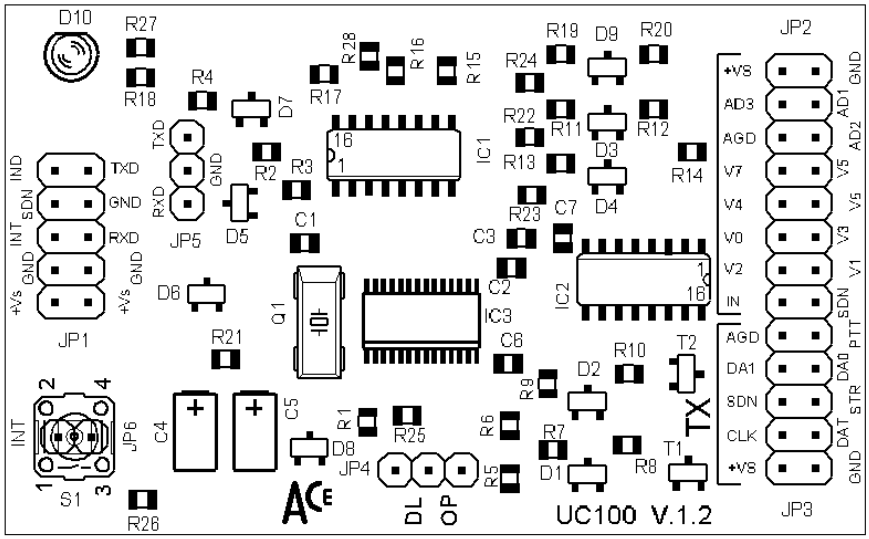

All information needed for programming or using the UC100 are provided for download from **www.ace-tek.com** . Please send your enquiry to e-mail **office@ace-tek.com**